Wireless CO Sensor
R718PA1
User Manual

Table of Contents

1. Introduction

R718PA1 is a Class A device based on the LoRaWAN™ protocol of Netvox and is compatible with the LoRaWAN protocol. R718PA1 can be connected to a corresponding carbon monoxide sensor (RS485) to report the concentration of carbon monoxide collected by the device to the corresponding gateway. The device is compatible with the LoRaWAN protocol.

LoRa Wireless Technology

LoRa is a wireless communication technology dedicated to long distance and low power consumption. Compared with other communication methods, LoRa spread spectrum modulation method greatly increases to expand the communication distance. Widely used in long-distance, low-data wireless communications. For example, automatic meter reading, building automation equipment, wireless security systems, industrial monitoring. Main features include small size, low power consumption, transmission distance, anti-interference ability and so on.

LoRaWAN

LoRaWAN uses LoRa technology to define end-to-end standard specifications to ensure interoperability between devices and gateways from different manufacturers.

2. Appearance

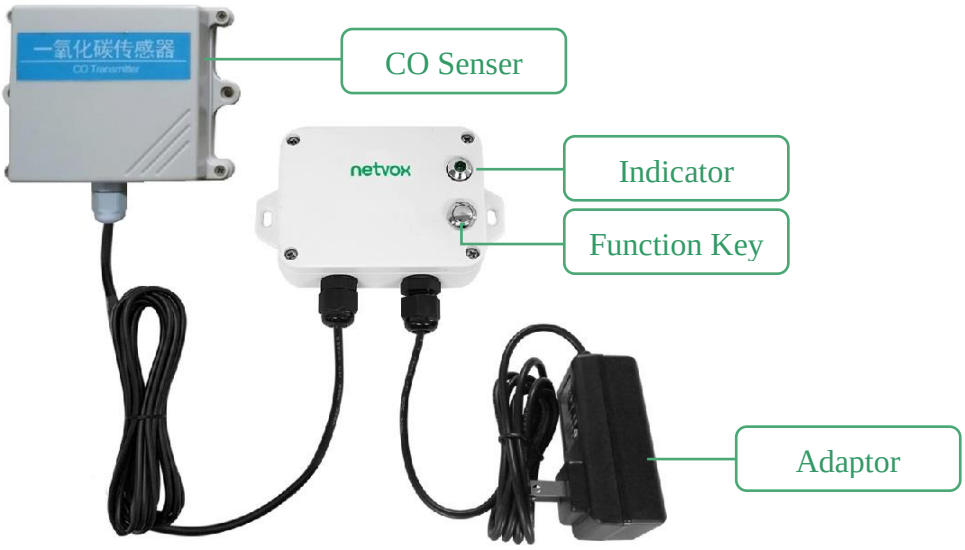

3. Features

- SX1276 wireless communication module
- 12V DC power supply
- CO detection
- Magnetic base
- Main body protection level IP65 / IP67 (optional)
- Compatible with LoRaWAN™ Class A
- Frequency hopping spread spectrum
- Configuring parameters and reading data via third-party software platforms, and set alarms via SMS text and email (optional)
- Applicable to third-party platforms: Actility/ThingPark, TTN, MyDevices/Cayenne

4. Set Up Instruction

On/Off

Power on	DC12V adapter
Turn on	DC12V power supply, the green indicator flashing once means turn on successfully.
Turn off (Restore to factory setting)	Press and hold the function key for 5 seconds till the green indicator flashes 20 times.
Power off	Remove DC12V adapter.
Note	1. The first 5 seconds after power on, the device will be in engineering test mode. 2. On/off interval is suggested to be about 10 seconds to avoid the interference of capacitor inductance and other energy storage components.

Network Joining

Never joined the network	Turn on the device to search the network to join. The green indicator stays on for 5 seconds: success The green indicator remains off: fail
Had joined the network (Not reset to the factory setting)	Turn on the device to search the previous network to join. The green indicator stays on for 5 seconds: success The green indicator remains off: fail
Fail to join the network	Suggest to check the device verification information on the gateway or consult your platform server provider.

Function Key

Press and hold for 5 seconds	Restore to factory setting / Turn off The green indicator flashes 20 times: success The green indicator remains off: fail
Press once	The device is in the network: the green indicator flashes once and sends a report The device is not in the network: the green indicator remains off

5. Data Report

The device will send a version package report immediately after power-on. Then, it will send a report data with the concentration of carbon monoxide **after it is powered on for 20s**.

The device sends data according to the default configuration before any other configuring.

Default setting:

MaxTime: Max Interval = 3min = 180s

MinTime: The MinTime configuration is not available.

*But the software has restriction, MinTime must be configured a number greater than 0.

Note: 1. The cycle of the device sending the data report is according to the default.

2. R718PA1 reports the concentration of carbon monoxide.

Please refer Netvox LoRaWAN Application Command document and Netvox Lora Command Resolver http://www.netvox.com.cn:8888/cmddoc to resolve uplink data.

5.1 Example of ReportDataCmd

FPort: 0x06

Bytes	1	1	1	Var (Fix=8 Bytes)
	Version	ReportType	ReportType	NetvoxPayLoadData

Version– 1 byte –0x01——the Version of NetvoxLoRaWAN Application Command Version

DeviceType– 1 byte – Device Type of Device

ReportType – 1 byte –the presentation of the NetvoxPayLoadData, according the devicetype

NetvoxPayLoadData– Fixed bytes (Fixed =8bytes)

Tips

1. Battery Voltage:

If the battery is equal to 0x00, it means that the device is powered by a DC power supply.

2. Version Packet:

When Report Type=0x00 is the version packet, such as 0157000B04202309250000, the firmware version is 2023.09.25.

3. Data Packet:

When Report Type=0x01 is data packet.

Uplink: 01570500FFFF0000FFFF00

1st byte (01): Version

2nd (57): DeviceType — R718PA1

3rd (05): ReportType

4th (00): Battery — 0V, DC powered

5th – 6th (FFFF): O_3 — FFFF(N/A)

7th – 8th (0000): CO — 0.0ppm, 0000 (HEX) = 0 (DEC), 0* 0.1ppm = 0.0ppm

9th – 10th (FFFF): NO —FFFF(N/A)

11th (00): Reserved

5.2 Example of ReportConfiguration

FPort：0x07

Bytes	1	1	Var (Fix =9 Bytes)
	CmdID	DeviceType	NetvoxPayLoadData

CmdID– 1 byte

DeviceType– 1 byte – Device Type of Device

NetvoxPayLoadData– var bytes (Max=9bytes)

Description	Device	Cmd ID	Device Type	NetvoxPayLoadData		
ConfigReport Req	R718PA1	0x01	0x57	MinTime (2bytes Unit: s)	MaxTime (2bytes Unit: s)	Reserved (5Bytes,Fixed 0x00)
ConfigReport Rsp		0x81		Status (0x00_success)		Reserved (8Bytes, Fixed 0x00)
ReadConfig ReportReq		0x02		Reserved (9Bytes, Fixed 0x00)		
ReadConfig ReportRsp		0x82		MinTime (2bytes Unit: s)	MaxTime (2bytes Unit: s)	Reserved (5Bytes,Fixed 0x00)

(1) Configure the report MaxTime = 1min (The MinTime configuration is useless, but it needs to be set greater than 0 because of the software limitation.)

Downlink: 0157000A003C0000000000

Device returns:

815700000000000000000 (configuration succeed)

815701000000000000000 (configuration failed)

(2) Read device configuration parameters

Downlink: 025700000000000000000

Device returns:

8257000A003C0000000000 (device current configuration parameter)

5.3 Example of GlobalCalibrateCmd

FPort: 0x0E

Description	Cmd ID	Sensor Type	PayLoad(Fix =9 Bytes)				
SetGlobalCalibrateReq	0x01	0x05	Channel (1Byte, 0_Channel1, 1_Channel2, etc)	Multiplier (2bytes, Unsigned)	Divisor (2bytes, Unsigned)	DeltValue (2bytes, Signed)	Reserved (2Bytes, Fixed 0x00)
SetGlobalCalibrateRsp	0x81		Channel (1Byte, 0_Channel1, 1_Channel2, etc)	Status (1Byte,0x00_success)	Reserved (7Bytes, Fixed 0x00)		
GetGlobalCalibrateReq	0x02		Channel (1Byte, 0_Channel1, 1_Channel2, etc)	Reserved (8Bytes, Fixed 0x00)			
GetGlobalCalibrateRsp	0x82		Channel (1Byte, 0_Channel1, 1_Channel2, etc)	Multiplier (2bytes, Unsigned)	Divisor (2bytes, Unsigned)	DeltValue (2bytes, Signed)	Reserved (2Bytes, Fixed 0x00)

SensorType: 0x05_CO Sensor; Channel: 0x00

(1) Increase CO by 10ppm

(channel: 0x00; Multiplier: 1; Divisor: 1; DeltValue: 100)

Downlink: 0105000001000000640000

Device returns:

8105000000000000000000 (configuration succeed)

8105000100000000000000 (configuration failed)

(2) Read device parameter

Downlink: 0205000000000000000000

Device returns:

8205000001000000640000 (device current parameter)

6. Installation

1. R718PA1 has a built-in magnet (as the figure below). It can be attached to the surface of an iron object conveniently and quickly when it is installed.

   In order to make the device installation more secure, use screws (purchased) to fix the device to the wall or other surface (such as the installation diagram). The device is screwed by two screws in the middle (purchased by users).

Note: Do not install the device in a metal shielded box or in an environment with other electrical equipment around it to avoid affecting the wireless transmission of the device.

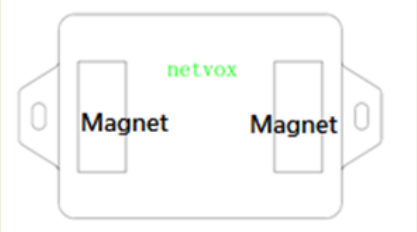

2. The device periodically reports the data according to Max Time. The default Max Time is 3min.

Note: Max Time can be modified by the downlink command, but it is not recommended to set this time too short.

3. The device can be used in scenarios such as:

- Boiler room
- Parking lot
- Gas water heater
- Mine environment monitoring

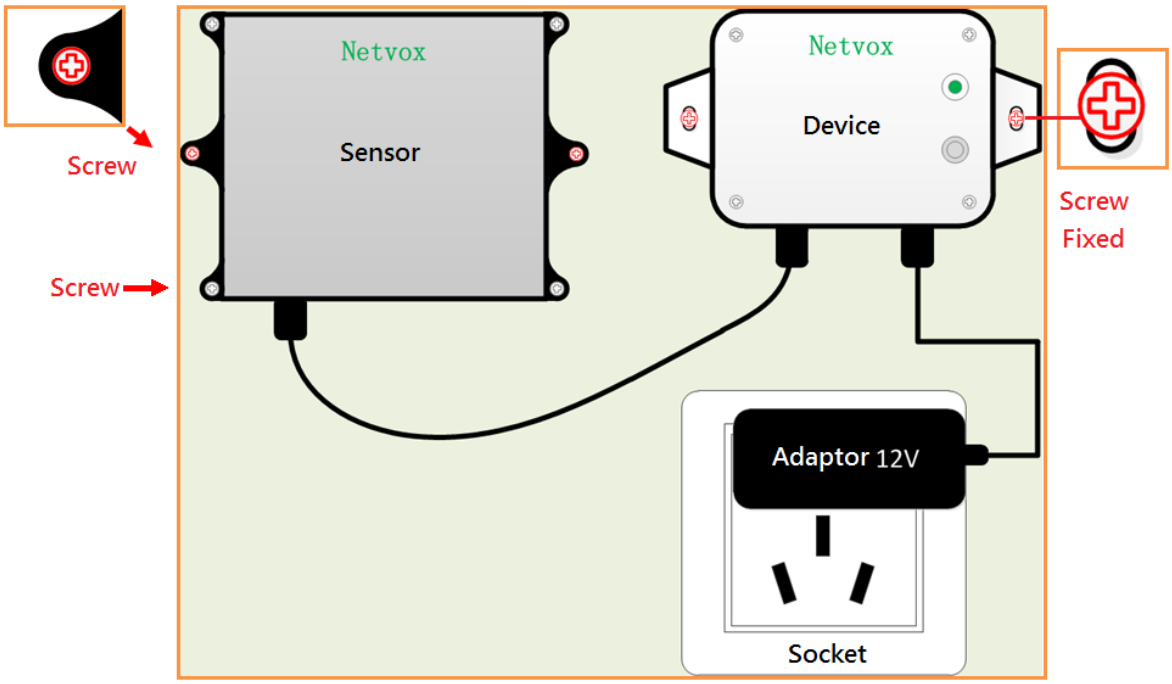

7. Important Maintenance Instructions

Kindly pay attention to the following in order to achieve the best maintenance of the product:

- Do not put the device near or submerge into water. Minerals in rain, moisture, and other liquids could cause corrosion of electronic components. Please dry the device, if it gets wet.
- Do not use or store the device in dusty or dirty environments to prevent damage to parts and electronic components.
- Do not store the device in high temperatures. This may shorten the lifespan of electronic components, damage batteries, and deform plastic parts.
- Do not store the device in cold temperatures. Moisture may damage circuit boards as the temperatures rise.
- Do not throw or cause other unnecessary shocks to the device. This may damage internal circuits and delicate components.
- Do not clean the device with strong chemicals, detergents, or strong detergents.
- Do not apply the device with paint. This may block detachable parts and cause malfunction.
- Do not dispose of batteries in fire to prevent explosion.

The instructions are applied to your device, battery, and accessories. If any device is not working properly, please bring it to the nearest authorized service provider for repair.